UNIVERSITY OF CAMBRIDGE INTERNATIONAL EXAMINATIONS
General Certificate of Education
Advanced Subsidiary Level and Advanced Level

CANDIDATE NAME

CENTRE NUMBER

CANDIDATE NUMBER

* 0 0 4 2 7 5 5 5 9 1 *

PHYSICS **9702/02**

Paper 2 AS Structured Questions **May/June 2007**

1 hour

Candidates answer on the Question Paper.

No Additional Materials are required.

READ THESE INSTRUCTIONS FIRST

Write your Centre number, candidate number and name on all the work you hand in.
Write in dark blue or black pen.
You may use a soft pencil for any diagrams, graphs or rough working.
Do not use staples, paper clips, highlighters, glue or correction fluid.
DO **NOT** WRITE IN ANY BARCODES.

Answer **all** questions.
You may lose marks if you do not show your working or if you do not use appropriate units.

At the end of the examination, fasten all your work securely together.
The number of marks is given in brackets [ ] at the end of each question or part question.

For Examiner's Use	
1	
2	
3	
4	
5	
6	
7	
Total	

This document consists of **16** printed pages.

© UCLES 2007

UNIVERSITY of CAMBRIDGE International Examinations

[Turn over

Data

speed of light in free space,	$c = 3.00 \cdot 10^{8}\ \text{m s}^{-1}$
permeability of free space,	$\mu_0 = 4\pi \cdot 10^{-7}\ \text{H m}^{-1}$
permittivity of free space,	$\epsilon_0 = 8.85 \cdot 10^{-12}\ \text{F m}^{-1}$
elementary charge,	$e = 1.60 \cdot 10^{-19}\ \text{C}$
the Planck constant,	$h = 6.63 \cdot 10^{-34}\ \text{J s}$
unified atomic mass constant,	$u = 1.66 \cdot 10^{-27}\ \text{kg}$
rest mass of electron,	$m_e = 9.11 \cdot 10^{-31}\ \text{kg}$
rest mass of proton,	$m_p = 1.67 \cdot 10^{-27}\ \text{kg}$
molar gas constant,	$R = 8.31\ \text{J K}^{-1}\ \text{mol}^{-1}$
the Avogadro constant,	$N_A = 6.02 \cdot 10^{23}\ \text{mol}^{-1}$
the Boltzmann constant,	$k = 1.38 \cdot 10^{-23}\ \text{J K}^{-1}$
gravitational constant,	$G = 6.67 \cdot 10^{-11}\ \text{N m}^2\ \text{kg}^{-2}$
acceleration of free fall,	$g = 9.81\ \text{m s}^{-2}$

© UCLES 2007

Formulae

uniformly accelerated motion, $s = ut + \frac{1}{2}at^2$
$v^2 = u^2 + 2as$

work done on/by a gas, $W = p\Delta V$

gravitational potential, $\phi = -\frac{Gm}{r}$

hydrostatic pressure, $p = \rho gh$

pressure of an ideal gas, $p = \frac{1}{3}\frac{Nm}{V}<c^2>$

simple harmonic motion, $a = -\omega^2 x$

velocity of particle in s.h.m., $v = v_0 \cos \omega t$
$v = \pm \omega \sqrt{(x_0^2 - x^2)}$

electric potential, $V = \frac{Q}{4\pi\epsilon_0 r}$

capacitors in series, $1/C = 1/C_1 + 1/C_2 + \ldots$

capacitors in parallel, $C = C_1 + C_2 + \ldots$

energy of charged capacitor, $W = \frac{1}{2}QV$

resistors in series, $R = R_1 + R_2 + \ldots$

resistors in parallel, $1/R = 1/R_1 + 1/R_2 + \ldots$

alternating current/voltage, $x = x_0 \sin \omega t$

radioactive decay, $x = x_0 \exp(-\lambda t)$

decay constant, $\lambda = \frac{0.693}{t_{\frac{1}{2}}}$

© UCLES 2007

[Turn over

Answer **all** the questions in the spaces provided.

1 The uncalibrated scale and the pointer of a meter are shown in Fig. 1.1.

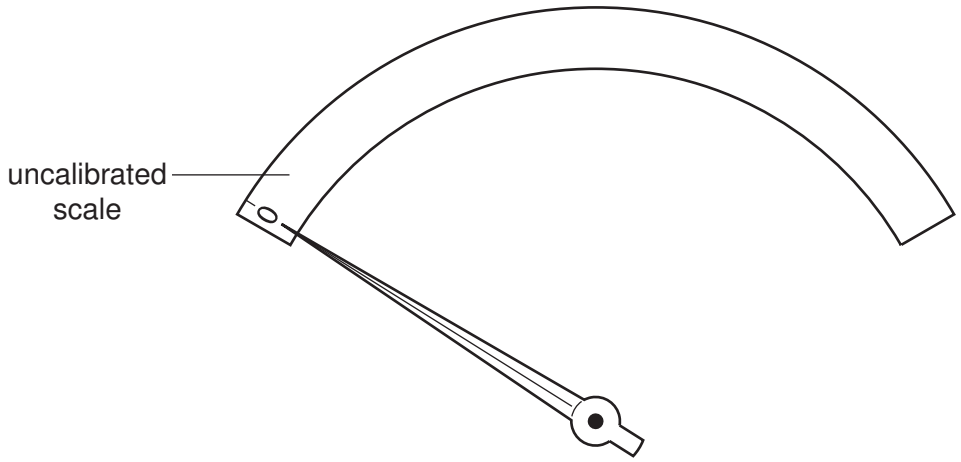

Fig. 1.1

The pointer is shown in the zero position.
The meter is to be used to indicate the volume of fuel in the tank of a car.
A known volume V of fuel is poured into the tank and the deflection θ of the pointer is noted.
Fig. 1.2 shows the variation with θ of V.

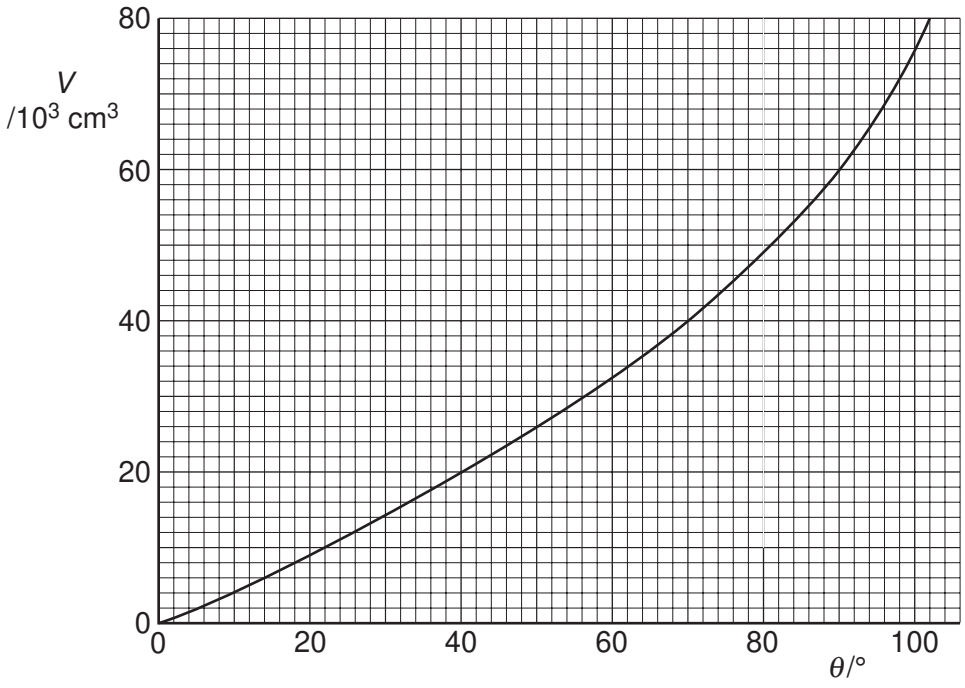

Fig. 1.2

(a) On Fig. 1.1,

(i) calibrate the scale at 20×10^3 cm^3 intervals, [2]

(ii) mark a possible position for a volume of 1.0×10^5 cm^3. [1]

(b) Suggest one advantage of this scale, as compared with a uniform scale, for measuring fuel volumes in the tank of the car.

.....

.....[1]

2 **(a)** Define *electric field strength*.

.....

.....[1]

(b) Two flat parallel metal plates, each of length 12.0 cm, are separated by a distance of 1.5 cm, as shown in Fig. 2.1.

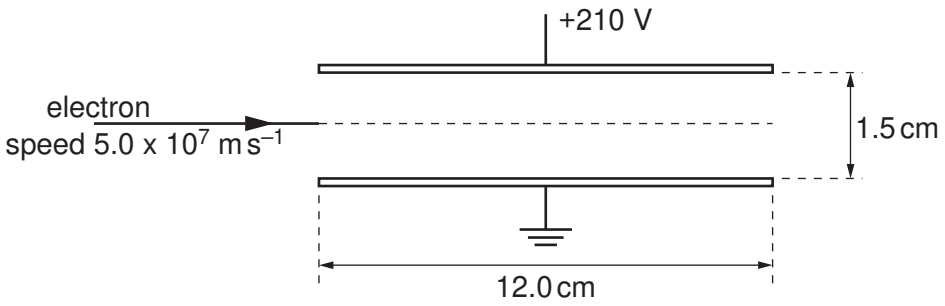

Fig. 2.1

The space between the plates is a vacuum.
The potential difference between the plates is 210 V. The electric field may be assumed to be uniform in the region between the plates and zero outside this region.
Calculate the magnitude of the electric field strength between the plates.

field strength = ...N C^{-1} [1]

© UCLES 2007

(c) An electron initially travels parallel to the plates along a line mid-way between the plates, as shown in Fig. 2.1. The speed of the electron is 5.0×10^7 m s^{-1}.

For the electron between the plates,

(i) determine the magnitude and direction of its acceleration,

acceleration = ... m s^{-2}

direction .....[4]

(ii) calculate the time for the electron to travel a horizontal distance equal to the length of the plates.

time = ... s [1]

(d) Use your answers in **(c)** to determine whether the electron will hit one of the plates or emerge from between the plates.

[3]

3 **(a)** Define *density*.

.....[1]

(b) Liquid of density ρ fills a container to a depth h, as illustrated in Fig. 3.1.

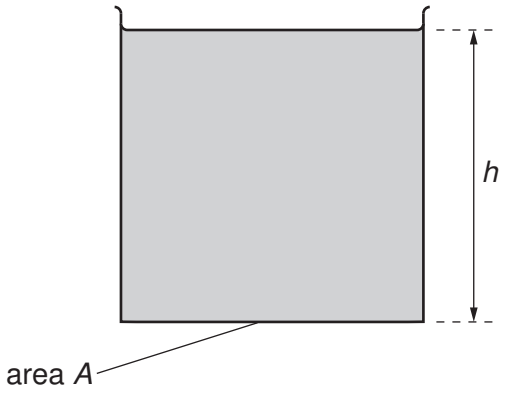

Fig. 3.1

The container has vertical sides and a base of area A.

(i) State, in terms of A, h and ρ, the mass of liquid in the container.

.....[1]

(ii) Hence derive an expression for the pressure p exerted by the liquid on the base of the container. Explain your working.

[2]

© UCLES 2007

(c) The density of liquid water is $1.0\,g\,cm^{-3}$. The density of water vapour at atmospheric pressure is approximately $\frac{1}{1600}\,g\,cm^{-3}$.

Determine the ratio

(i) $\frac{\text{volume of water vapour}}{\text{volume of equal mass of liquid water}}$,

ratio = ...[1]

(ii) $\frac{\text{mean separation of molecules in water vapour}}{\text{mean separation of molecules in liquid water}}$.

ratio = ...[2]

(d) State the evidence for

(i) the molecules in solids and liquids having approximately the same separation,

.....

.....[1]

(ii) strong rigid forces between molecules in solids.

strong: .....

rigid: .....[2]

4 **(a)** A stone of mass 56 g is thrown horizontally from the top of a cliff with a speed of $18\,m\,s^{-1}$, as illustrated in Fig. 4.1.

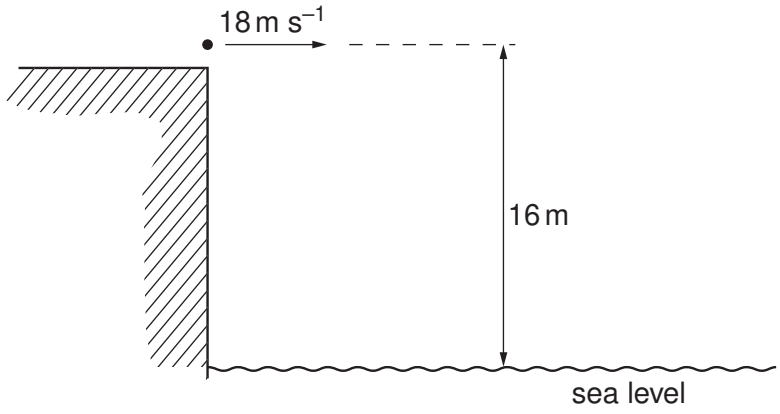

Fig. 4.1

The initial height of the stone above the level of the sea is 16 m. Air resistance may be neglected.

(i) Calculate the change in gravitational potential energy of the stone as a result of falling through 16 m.

change = ... J [2]

(ii) Calculate the total kinetic energy of the stone as it reaches the sea.

kinetic energy = ... J [3]

© UCLES 2007

(b) Use your answer in **(a)(ii)** to show that the speed of the stone as it hits the water is approximately $25\,m\,s^{-1}$.

[1]

(c) State the horizontal velocity of the stone as it hits the water.

horizontal velocity = ...$m\,s^{-1}$ [1]

(d) **(i)** On the grid of Fig. 4.2, draw a vector diagram to represent the horizontal velocity and the resultant velocity of the stone as it hits the water. [1]

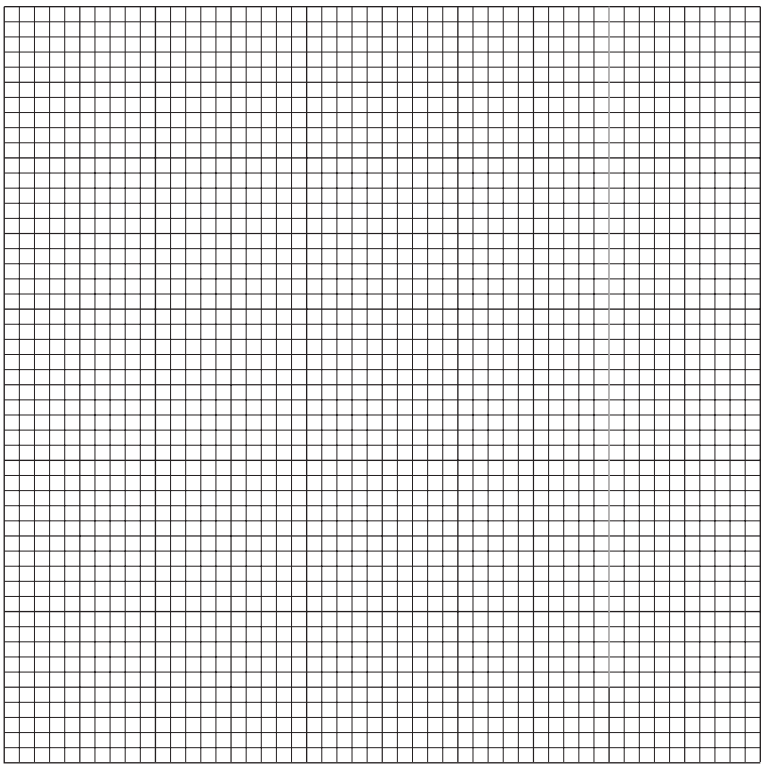

Fig. 4.2

(ii) Use your vector diagram to determine the angle with the horizontal at which the stone hits the water.

angle = ... ° [2]

5 Light reflected from the surface of smooth water may be described as a polarised transverse wave.

(a) By reference to the direction of propagation of energy, explain what is meant by

(i) a *transverse wave*,

.....

.....[1]

(ii) *polarisation*.

.....

.....[1]

(b) A glass tube, closed at one end, has fine dust sprinkled along its length. A sound source is placed near the open end of the tube, as shown in Fig. 5.1.

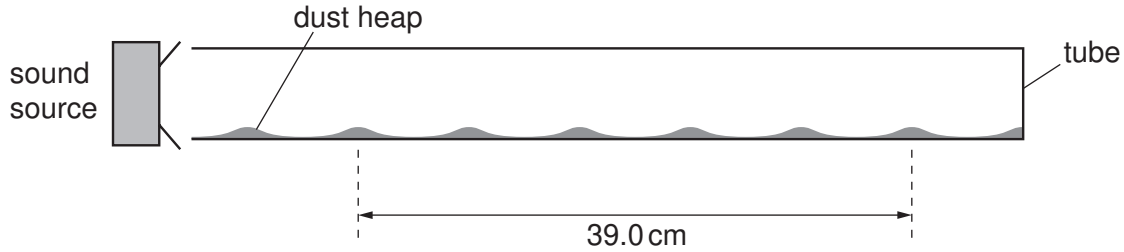

Fig. 5.1

The frequency of the sound emitted by the source is varied and, at one frequency, the dust forms small heaps in the tube.

(i) Explain, by reference to the properties of stationary waves, why the heaps of dust are formed.

.....

.....

.....

.....[3]

© UCLES 2007

(ii) One frequency at which heaps are formed is 2.14 kHz.
The distance between six heaps, as shown in Fig. 5.1, is 39.0 cm.
Calculate the speed of sound in the tube.

speed = ... $m\,s^{-1}$ [3]

(c) The wave in the tube is a stationary wave. Explain, by reference to the formation of a stationary wave, what is meant by the speed calculated in **(b)(ii)**.

.....

.....

.....

.....[3]

6 A car battery has an internal resistance of 0.060 Ω. It is re-charged using a battery charger having an e.m.f. of 14 V and an internal resistance of 0.10 Ω, as shown in Fig. 6.1.

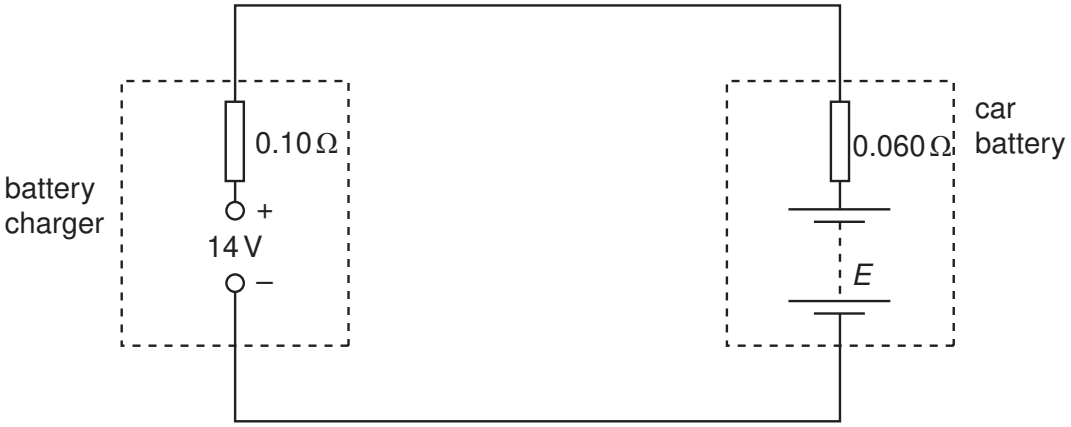

Fig. 6.1

(a) At the beginning of the re-charging process, the current in the circuit is 42 A and the e.m.f. of the battery is *E* (measured in volts).

(i) For the circuit of Fig. 6.1, state

1. the magnitude of the total resistance,

resistance = ... Ω

2. the total e.m.f. in the circuit. Give your answer in terms of *E*.

e.m.f. = ... V

[2]

(ii) Use your answers to **(i)** and data from the question to determine the e.m.f. of the car battery at the beginning of the re-charging process.

e.m.f. = ...V [2]

(b) For the majority of the charging time of the car battery, the e.m.f. of the car battery is 12 V and the charging current is 12.5 A. The battery is charged at this current for 4.0 hours. Calculate, for this charging time,

(i) the charge that passes through the battery,

charge = ... C [2]

(ii) the energy supplied from the battery charger,

energy = ... J [2]

(iii) the total energy dissipated in the internal resistance of the battery charger and the car battery.

energy = ... J [2]

(c) Use your answers in **(b)** to calculate the percentage efficiency of transfer of energy from the battery charger to stored energy in the car battery.

efficiency = ...% [2]

© UCLES 2007

7 The radioactive decay of a strontium (Sr) nucleus is represented in Fig. 7.1.

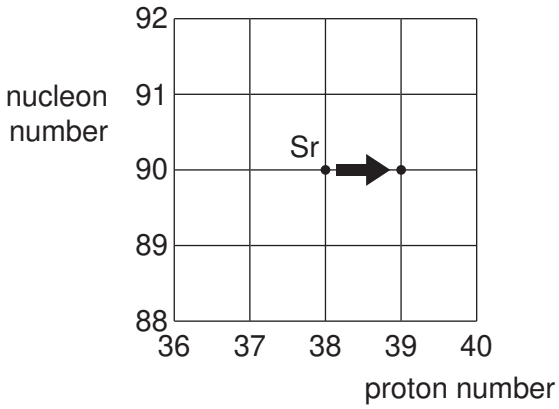

Fig. 7.1

(a) State whether Fig. 7.1 represents α-decay, β-decay or γ-decay.

.....[1]

(b) One type of radioactive decay cannot be represented on Fig. 7.1.
Identify this decay and explain why it cannot be represented.

.....

.....

.....[2]

Permission to reproduce items where third-party owned material protected by copyright is included has been sought and cleared where possible. Every reasonable effort has been made by the publisher (UCLES) to trace copyright holders, but if any items requiring clearance have unwittingly been included, the publisher will be pleased to make amends at the earliest possible opportunity.

University of Cambridge International Examinations is part of the Cambridge Assessment Group. Cambridge Assessment is the brand name of University of Cambridge Local Examinations Syndicate (UCLES), which is itself a department of the University of Cambridge.

© UCLES 2007